Big size immersion heater or controls enclosure, for direct welding on pipes

Size(mm)	Volume(cm³)	Material	Protection grade		Model
125 × 125 × 135	1668	stainless steel	IP69K	IK7	**Y3T8**

Suitable for

- ☐ Temperature sensor
- ☒ Immersion heater
- ☐ Finned heater
- ☒ Thermostat
- ☐ Level sensor
- ☒ Electronic board

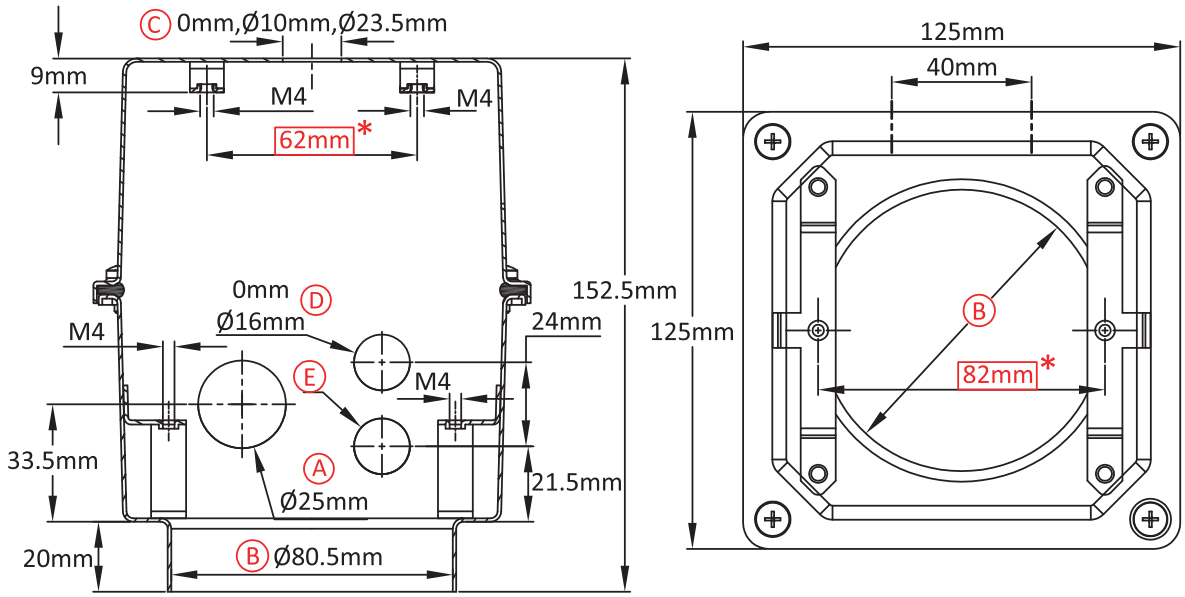

Main references

Ⓐ(mm)	Ⓑ(mm)	Ⓒ(mm)	Ⓓ(mm)	Ⓔ(mm)	304	316
25	80.5	0	16	16	Y3T880503S3G1008	Y3T880503S3G1009
25	80.5	0	0	16	Y3T880502C5G1008	Y3T880502C5G1009
25	80.5	0	0	0	Y3T88050125G1008	Y3T88050125G1009
25	80.5	10	16	16	Y3T8805A3S3G1008	Y3T8805A3S3G1009
25	80.5	10	0	16	Y3T8805A2C5G1008	Y3T8805A2C5G1009
25	80.5	10	0	0	Y3T8805A125G1008	Y3T8805A125G1009
25	80.5	23.5	16	16	Y3T8805D3S3G1008	Y3T8805D3S3G1009
25	80.5	23.5	0	16	Y3T8805D2C5G1008	Y3T8805D2C5G1009
25	80.5	23.5	0	0	Y3T8805D125G1008	Y3T8805D125G1009

Cable gland not included in these reference, consult us if you want them.
Red dimensions inside rectangular frames are used for accessories assembly.

Links

- Page (.pdf)
- Drawing 2D (.dwg)
- Drawing 3D (.stp)

Because of permanent improvement of our products, drawings, descriptions, features used on these data sheets are for guidance only and can be modified without prior advice